Sun 5-Slot Office Pedestal

Installation Manual

Sun Microsystems, Inc. • 2550 Garcia Avenue • Mountain View, CA 94043 • 415-960-1300

Part No: 800-3199-10
Revision A of April 17, 1989

The Sun logo, Sun Microsystems, and Sun Workstation are registered trademarks of Sun Microsystems, Inc.

Sun, Sun-2, Sun-3, Sun-4, Sun386*i*, SunInstall, SunOS, SunView, NFS, SunLink, NeWS, and SPARC are trademarks of Sun Microsystems, Inc.

UNIX is a registered trademark of AT&T.

All other products or services mentioned in this document are identified by the trademarks or service marks of their respective companies or organizations, and Sun Microsystems, Inc. disclaims any responsibility for specifying which marks are owned by which companies or organizations.

CAUTION

This equipment generates, uses, and can radiate radio frequency energy and if not installed and used in accordance with the instructions manual, may cause interference to radio communications. It has been tested and found to comply with the limits for a Class A computing device pursuant to Subpart J of Part 15 of FCC Rules, which are designed to provide reasonable protection against such interference when operated in a commercial environment. Operation of this equipment in a residential area is likely to cause interference in which case the user at his own expense will be required to take whatever measures may be required to correct the interference.

This digital apparatus does not exceed the Class A limits for radio noise emissions from digital apparatus set out in the Radio Interference Regulations of the Canadian Department of Communications.

Le présent appareil numérique n'émet pas de bruits radioélectriques dépassant les limites applicables aux appareils numériques de la classe A prescrites dans le Règlement sur le brouillage radioélectrique édicté par le ministère des Communications du Canada.

WARNING

There is a Lithium Battery molded into the Mostek real-time clock, No. MK48T02BU-25 or MK48T02B-XX, where X may be any number between 0-9. This is NOT a customer-replacable part. The battery may explode if mistreated. No not dispose of the component in fire. Do not disassemble it or attempt to recharge it.

Copyright © 1989 Sun Microsystems, Inc. – Printed in U.S.A.

All rights reserved. No part of this work covered by copyright hereon may be reproduced in any form or by any means – graphic, electronic, or mechanical – including photocopying, recording, taping, or storage in an information retrieval system, without the prior written permission of the copyright owner.

Restricted rights legend: use, duplication, or disclosure by the U.S. government is subject to restrictions set forth in subparagraph (c)(1)(ii) of the Rights in Technical Data and Computer Software clause at DFARS 52.227-7013 and in similar clauses in the FAR and NASA FAR Supplement.

The Sun Graphical User Interface was developed by Sun Microsystems Inc. for its users and licensees. Sun acknowledges the pioneering efforts of Xerox in researching and developing the concept of visual or graphical user interfaces for the computer industry. Sun holds a non-exclusive license from Xerox to the Xerox Graphical User Interface, which license also covers Sun's licensees.

Contents

Chapter 1 Basic Installation **3**
1.1. Introduction 3
1.2. Installation Instructions 3
1.3. Unpackaging and Inspecting the System 4
1.4. Cabling 4
1.5. Powering On 8

Chapter 2 Connecting Monitors **13**
2.1. Connecting the Monochrome Monitor 13
2.2. Connecting a Color Monitor 14
2.3. Connecting Grayscale Monitors 15
2.4. Degaussing the Color Monitor 16
External Degaussing 17

Chapter 3 Accessing the Card Cage and the Backplane Jumpers **21**

Chapter 4 Preparing Ethernet **27**

Chapter 5 Connecting External SCSI Devices **35**

Chapter 6 Specifications **39**
6.1. Ergonomics 39
6.2. CAUTIONS 40

Tables

Table 4-1 Ethernet Cabling Limitations 29

Table 6-1 Specifications Table 37

Figures

Figure 1-1 System Exterior 4
Figure 1-2 System Top Cover and PC Boards 5
Figure 1-3 Knob 6
Figure 1-4 Cable Management Clips 7

Figure 2-1 Color and Sync Connection Example 15
Figure 2-2 Color Output and Grayscale Connection Example 16

Figure 3-1 Backplane Jumpers 23

Figure 4-1 Linking Up to a Sun Level "2" Type Ethernet Transceiver 28
Figure 4-2 Linking Up to a Sun Level "1" Type Ethernet Transceiver 29
Figure 4-3 Ethernet Cabling Lengths 31

1

Basic Installation

Basic Installation 3

1.1. Introduction 3
1.2. Installation Instructions 3
1.3. Unpackaging and Inspecting the System 4
1.4. Cabling 5
1.5. Powering On 9

1

Basic Installation

This manual provides basic installation instructions for a Sun system in a 5-slot Office Pedestal.

1.1. Introduction

A basic Sun system consists of a system enclosure, a CPU, and optional peripheral devices and/or PC boards. This manual describes the 5-Slot Office Pedestal, a type of system enclosure. The instructions in this manual should work for any Sun system that uses a 5-Slot Office Pedestal, independent of the Sun CPU or other optional equipment. In places where information specific to other devices is required, this manual refers you to the manuals that come with those devices.

In addition to this manual, you should have received a System Overview, and a CPU Installation Manual with your system. These three manuals (this manual, the System Overview, and the CPU Installation Manual) are designed to be used together as a set:

- The System Overview describes the system and its documentation.
- The System Enclosure Installation Manual (that's this one!) provides the basic hardware installation procedure.
- CPU Installation Manual provides information specific to the CPU, including cabling instructions.

Depending on the hardware options shipped with your system, you may receive additional manuals that describe them.

1.2. Installation Instructions

The basic installation consists of the following steps:

- Remove the system from the box and inspect the contents
- Connect all cables
- Power-on the system

Because of the different types of devices that may come with this system, this chapter refers to other chapters and manuals for specific cabling instructions.

Figure 1-1 shows the exterior of the system. Notice that it has a removable top cover, and a hinged front panel. The top cover protects the PC boards and cables, and the front panel protects the disk drives and power switch.

Figure 1-1 *System Exterior*

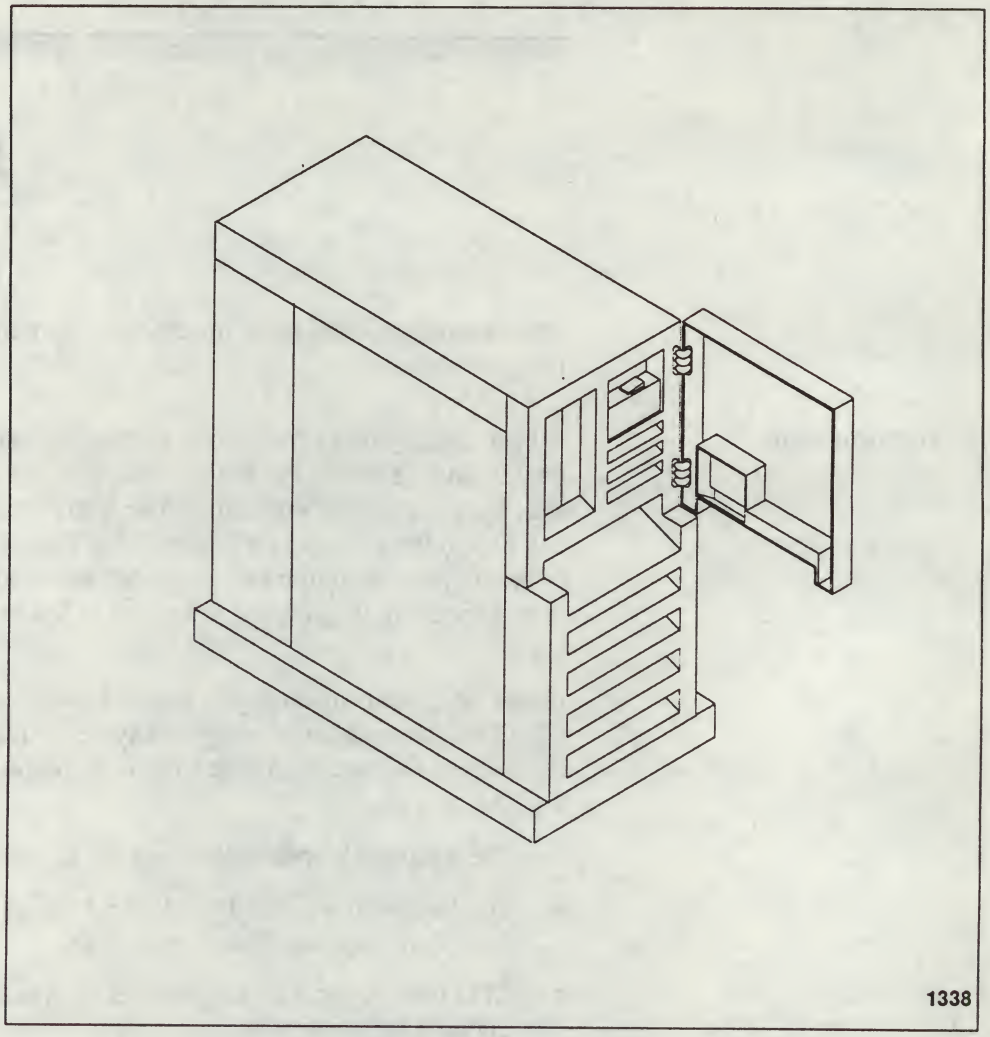

1.3. Unpackaging and Inspecting the System

When you receive your shipment, inspect all shipping cartons *immediately* for evidence of damage. If any shipping carton is severely damaged, request that the carrier's agent be present when the carton is opened. If the carrier's agent is not present when a carton is opened and the contents are found to be damaged, keep all contents and packing materials for the agent's inspection.

Unpackaging instructions are printed on the outside of the shipping container.

After you have unpacked the system, continue to the next section for cabling instructions.

1.4. Cabling

Virtually all cables connect to the PC boards; because the 5-Slot Office Pedestal can hold many different types of PC boards, many of the instructions in this section refer you to manuals specific to the PC boards.

Figure 1-2 shows the system with the top cover removed and the PC boards exposed.

Figure 1-2 *System Top Cover and PC Boards*

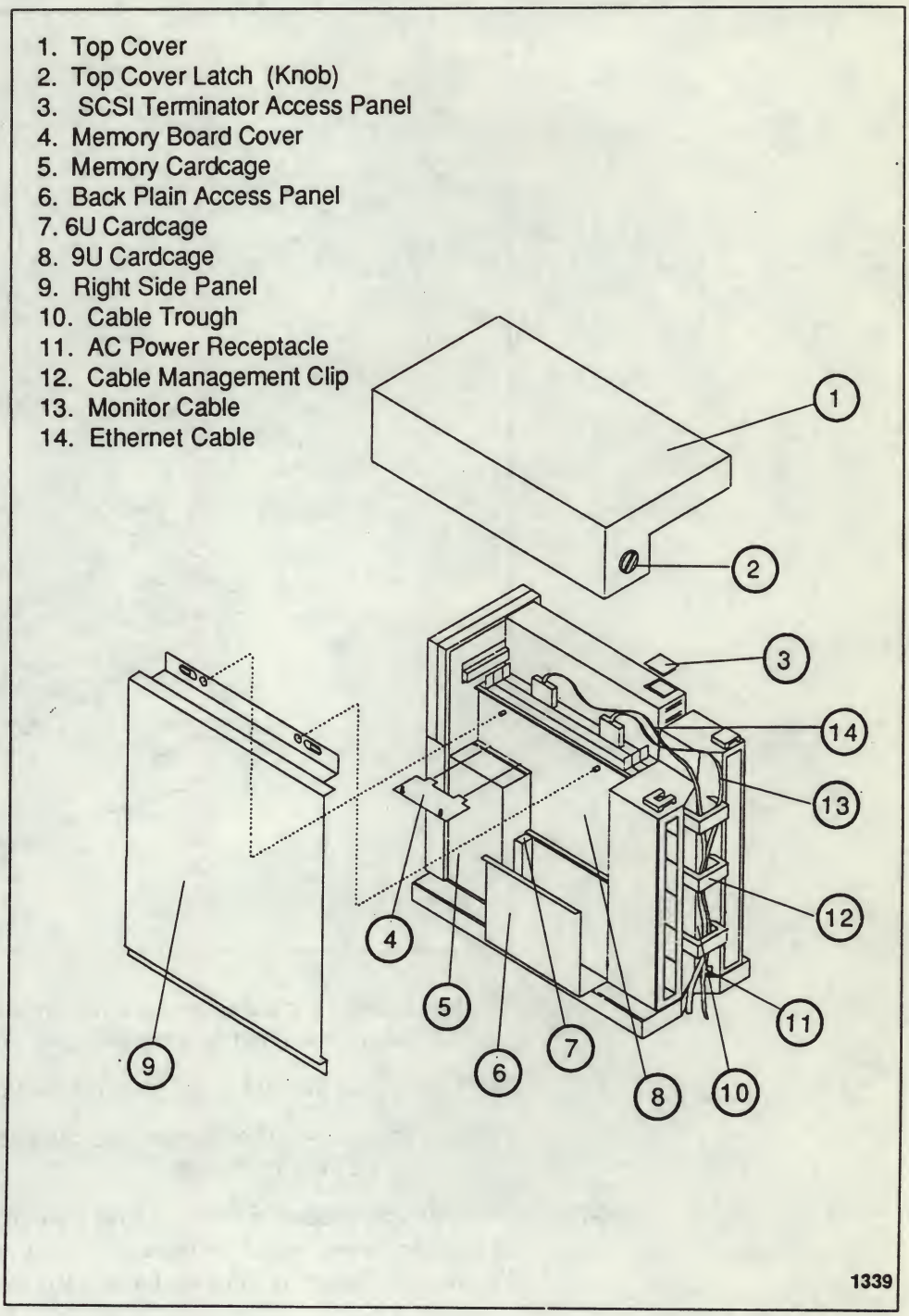

Cabling Sequence:

1) Remove the top cover, using the following steps:

   a. Turn the knob counterclockwise until it releases the top cover. When it releases, you will hear it click. Figure 1-3 shows the knob.

Figure 1-3 *Knob*

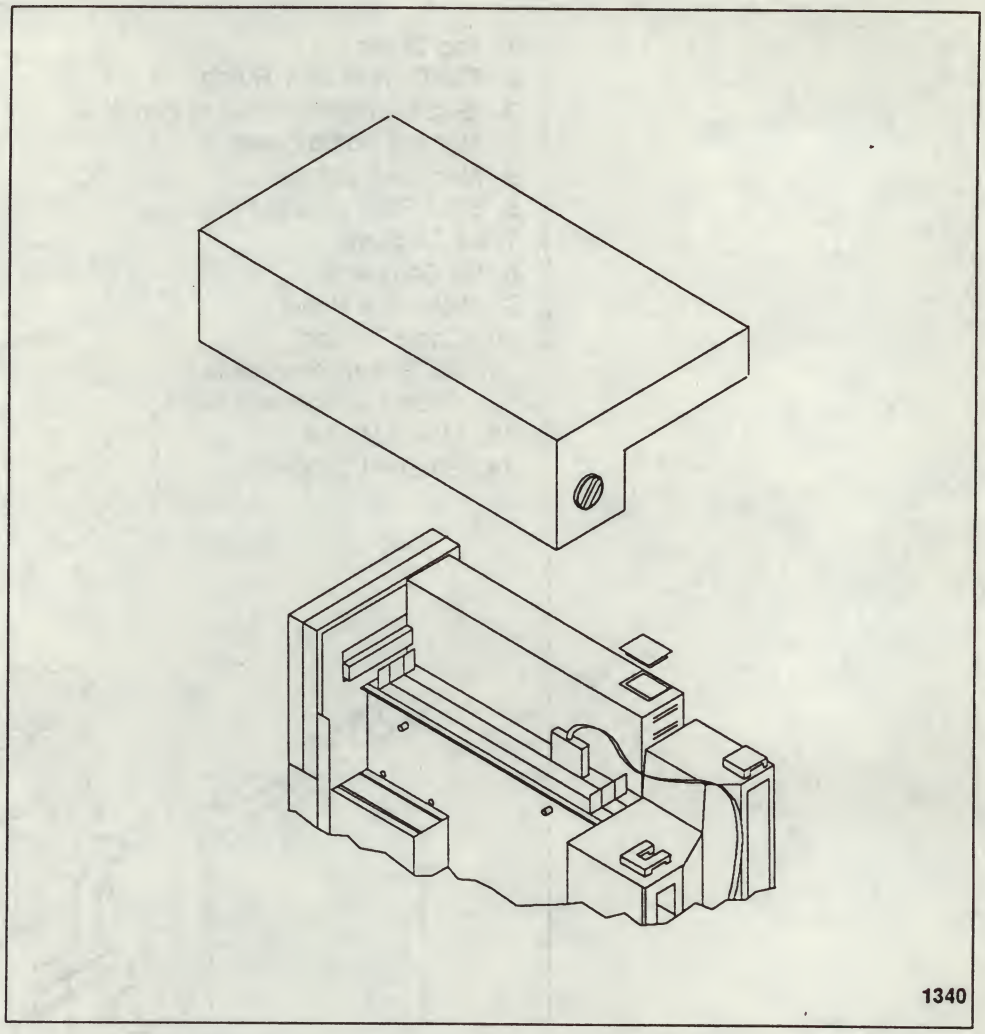

b. Pull the top cover up and away towards the rear of the machine. Place it where it will not be damaged.

2) Connect all the cables that go to the card cage. These include:

a. Ethernet — The Ethernet cable usually connects to the Ethernet connector on the CPU board.

NOTE *This procedure assumes that you have an active Ethernet connection ready to connect to the system. For instructions to prepare an Ethernet connection, see the chapter Preparing Ethernet later in this manual, then return here.*

b. Keyboard/mouse, external SCSI cables, terminal/printer, etc. — See the CPU Installation Manual, and the manuals for any other boards with cables.

c. Monitor — See the chapter *Connecting Monitors* later in this manual for details.

d. External SCSI Devices, — See the chapter *Connecting External SCSI Devices* later in this manual for details.

3) Open the cable management clips by gently pushing in of the finger groves on the left side of the clip. The clips, which appear in Figure 1-4, hinge on the right as you face the rear of the unit.

4) Route the cables towards the rear edge of the system as shown in Figure 1-2. The cables can be routed either down the "V" shaped groove in the system rear or they can be routed straight out the top/back of the system.

5) After the cables are in place, close the cable management clips. They should click into place.

CAUTION **Do not use the cable management clips as handles, as this may break them.**

Figure 1-4 *Cable Management Clips*

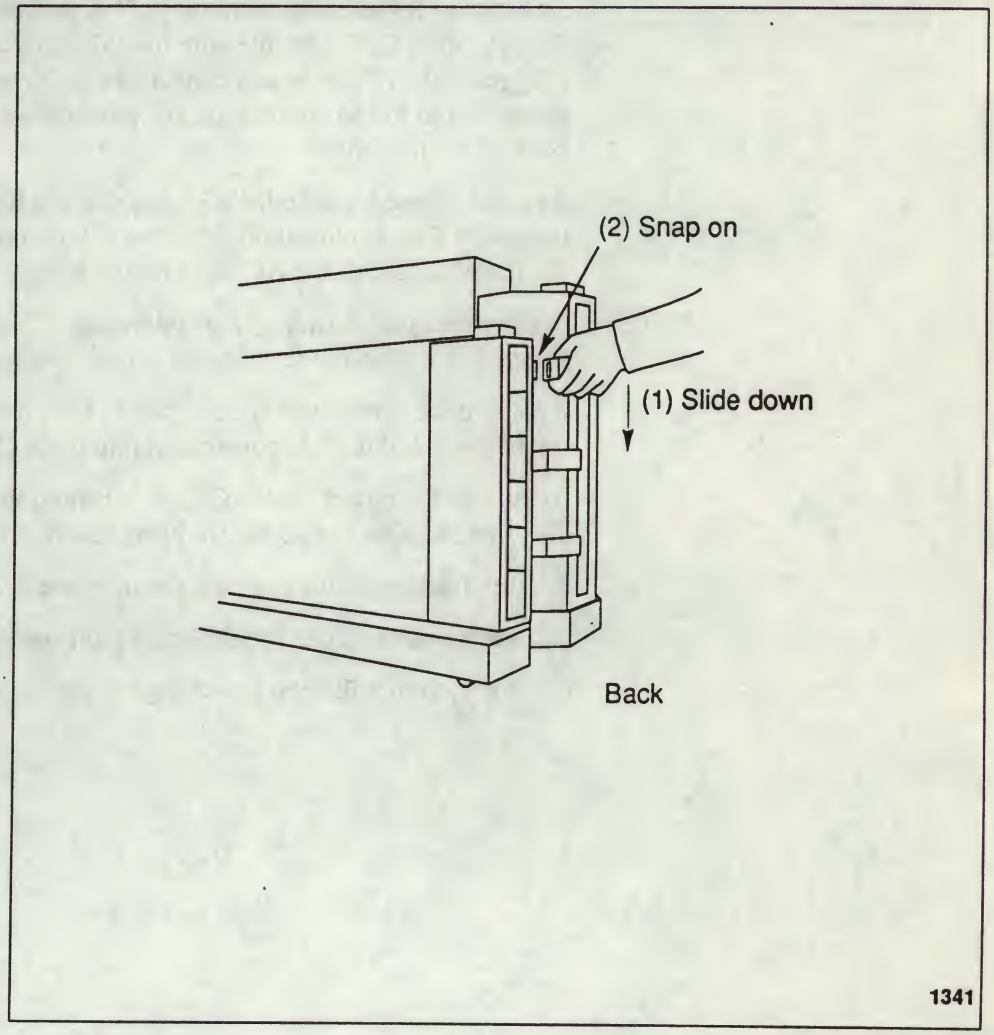

6) Connect the cables to their respective devices

7) Replace the system cover as follows:

   a. Set the cover on top of the system and slide it towards the front until the tabs mate with the retaining slots at the front and rear of the system. (see Figure 1-2).

   b. Turn the knob until it latches.

NOTE *This knob turns counterclockwise to latch. The first half-turn rotates the latch to hold the cover in place. Continuing to rotate the latch tightens the latch against the side of the cover. To prevent possible damage by overtightening the latch, do not turn the latch more than 2 or 3 turns. The latch and knob appear in Figure 1-3.*

The system is now ready to be powered on.

1.5. Powering On

Before powering the system, make certain that the a) AC power switch to the monitor is ON (the side with the "| " is pushed in) b) the AC power switch to the cabinet is OFF (the side with the "O" is pushed in) and c) the monitor is plugged into AC power at a convenient wall outlet. Ensure that the system is plugged into the an appropriate AC power source. The AC rating is listed on the back of the machine.

Systems shipped inside the USA and Canada have an AC power cord with a three-slot female plug at one end and a three-pronged plug at the other end. Plug the female end into the AC input on the bottom rear of the pedestal.

NOTE *Systems shipped outside of the continental US may have different power cords shipped in a separate kit. See the instructions provided with the kit for details.*

Again, make certain that the AC power switch on the pedestal is OFF then plug the other end of the AC power cord into the AC wall receptacle.

Next, turn the power switch ON. It is behind the front door, to the right of the disk drives. You should see (or hear) several things happen:

- the fans inside the pedestal should come on
- the monitor screen should light up on completion of the internal self test
- the system will beep indicating the system is ready

After the CPU board completes its self test, a message similar to the following will appear on your screen:†

```
Self Test Passed

Sun Workstation, Model Sun-_/___ Series, Sun-_ Keyboard
 ROM Rev __ __MB Memory installed, Serial # - - - -
Ethernet address --:--:--:--:--:--
Testing __ Megabytes of Memory... Completed
```

For further information describing how to bring up UNIX,‡ log on, and choose your password, see *Installing UNIX on the Sun Workstation.*

CAUTION **To avoid damage to internal circuits, do not disconnect or plug in the keyboard while the workstation is powered up.**

†Parts of this message are conditional: the "Sun-_/___" may not be displayed, and the dashed areas will vary, based on the system you ordered and its options. No Sun logo will appear on a terminal attached to a serial port.
‡UNIX is a trademark of AT&T Bell Laboratories.

2

Connecting Monitors

Connecting Monitors **13**

2.1. Connecting the Monochrome Monitor 13
2.2. Connecting a Color Monitor 14
2.3. Connecting Grayscale Monitors 15
2.4. Degaussing the Color Monitor 16
External Degaussing 17

2

Connecting Monitors

Currently, your Sun system may come equipped to use either standard or increased resolution (1600x1280 pixel) monochrome monitors, a grayscale monitor, or one of three color monitors.

NOTE *These instructions cover only current monitors. In the future, additional monitors may be available. To connect a monitor that is not described here, see the instructions provided with the monitor, or with the video board.*

2.1. Connecting the Monochrome Monitor

CAUTION **Before beginning the following connections, make certain that the AC power switches of the pedestal AND the monitor are OFF. The OFF position of the AC power switch is with the side marked "O" pushed in.**

If you have a monochrome (black and white) monitor, connect it to the appropriate video board. This will be located in the card cage under the system top cover.

The monitor video cable has a 9-pin D connector at each end.

1. Plug the male D connector of the video cable into the "VIDEO" jack on the video board, and tighten the screws.
2. Plug the female D connector of the video cable into the "VIDEO" input of the monitor and tighten the screws on it.

For systems shipped inside the continental US, the monitor power cable is a three-wire cable. (Systems shipped outside the US, may include additional power cables and instructions).

1. Plug the female end into the power receptacle on the rear of the monitor.
2. Plug the male end into the AC wall receptacle.
3. Turn the monitor's power switch to the ON position.

The monitor will slowly come on. You should also notice a crackling sound of static — if the screen does not come on after powering-up the pedestal, try rotating the brightness control on the rear of the CRT.

2.2. Connecting a Color Monitor

Most color boards connect to the monitor over a BNC cable that consists of four cables bundled together as one. Three of these BNC cables transmit color signals for Red, Green, Blue, and the fourth transmits Sync signals.

NOTE *Some color boards use a different type of cable; these are described in the manuals for the color boards.*

The **RGB-Sync video cable** is a jacketed bundle of four 15-foot lengths of coaxial cable with color-coded male BNC connectors at each end. Figure 2-1 shows the color video connections.

1. Plug the "red" cable into the female BNC connector marked "RED" on the rear edge of the Sun video board; connect the other end of this cable into the similar connector marked "RED" on the rear of the color monitor.
2. Plug the "green" cable into the female BNC connector marked "GREEN" on the rear edge of the Sun video board; connect the other end of this cable into the similar connector marked "GREEN" on the rear of the color monitor.
3. Plug the "blue" cable into the female BNC connector marked "BLUE" on the rear edge of the Sun video board; connect the other end of this cable into the similar connector marked "BLUE" on the rear of the color monitor.
4. Plug the remaining cable (has no color code) into the female BNC connector marked "Sync" on the rear edge of the Sun color board; connect the other end of this cable into the similar connector marked "SYNC" on the rear of the color monitor.

NOTE *Sun color boards have an additional connector at the top that has no "monitor related" function. Do not attach any of the BNC cables to the top connector.*

5. Finally, if your color monitor has impedance switches on the back of the monitor (marked "75Ω/High") make sure they are set to the "75Ω" position.

For systems shipped in the USA or Canada, the **monitor power cable** is a standard three-wire type. Make certain the monitor is OFF (side of the switch with "O" is pressed in).

NOTE *Systems shipped outside of the continental US or Canada may have different power cords shipped in a separate kit. See the instructions provided with the kit for details.*

1. Plug the female end into the power receptacle on the rear of the monitor.
2. Plug the male end into the AC wall receptacle.
3. Turn the monitor's power switch to the ON position.

The monitor will slowly come on. You should also notice a crackling sound of static — if the screen does not come on after powering-up the pedestal, try rotating the brightness control on the monitor.

Figure 2-1 *Color and Sync Connection Example*

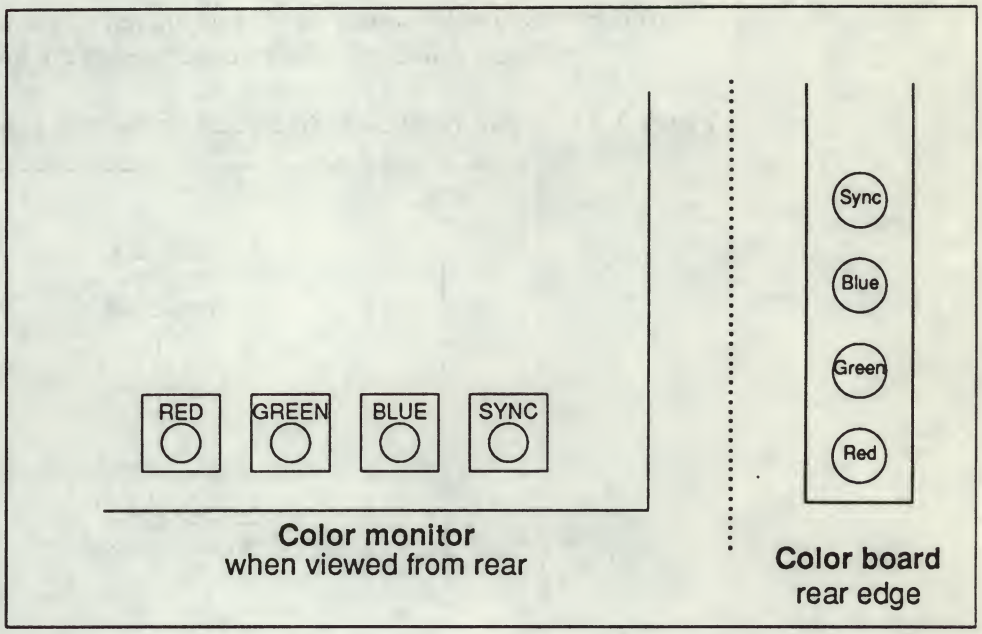

2.3. Connecting Grayscale Monitors

If your machine comes with a grayscale monitor and a grayscale video cable, you will need to read the following subsection.

Sun currently supplies grayscale monitors with a video cable that has two BNC connectors at each end. The following text describes this procedure and provides an illustration. To connect a grayscale monitor, run the grayscale cables from the color connectors on the color board to the back of the grayscale monitor, as shown in the following figure:

CAUTION **Before beginning the following connections, make certain that the AC power switches of the pedestal AND the monitor are OFF. The OFF position of the AC power switch is with the side marked "O" pushed in.**

Attach the grayscale video cable as follows:

1. Plug the BNC connector labelled "SYNC" to the BNC connector marked "SYNC" on the rear edge of the board.

2. Attach the BNC connector, labelled "VIDEO", onto the RED BNC connector on the rear edge of the board.

3. Plug the "SYNC" BNC connector at the opposite end of the cable to the "SYNC" BNC connector on the back of the grayscale monitor.

4. Attach the remaining BNC to the "VIDEO" BNC connector on the back of the monitor.

NOTE *Sun color boards have an additional connector at the top that has no monitor related function. Do not attach any of the BNC cables to the top connector.*

Figure 2-2 *Color Output and Grayscale Connection Example*

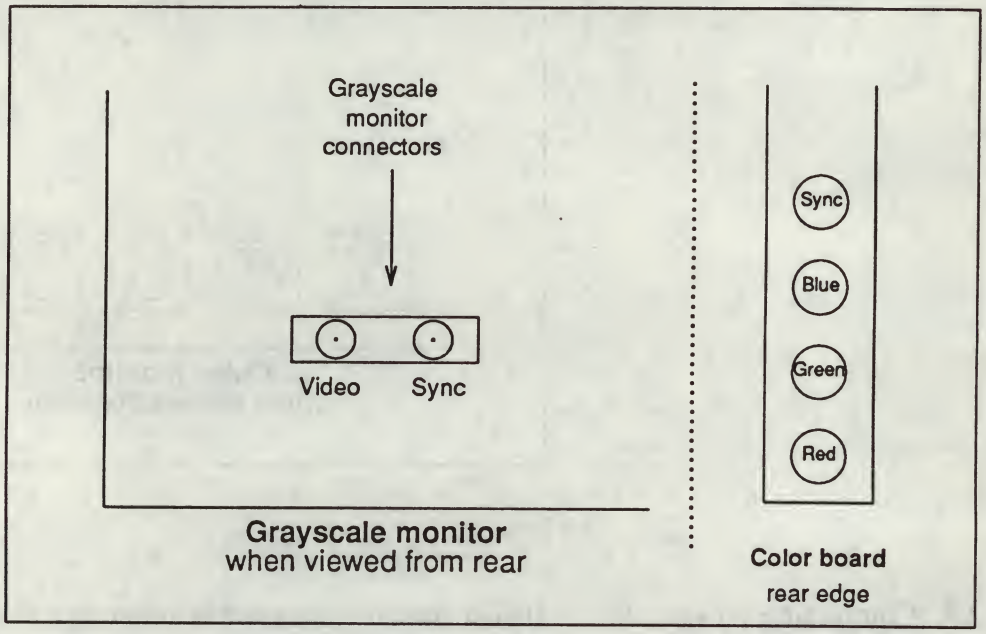

NOTE *If you accidently reverse the BNC connections, the grayscale monitor will not work properly. If the video display malfunctions after you have powered up the system, recheck the grayscale video connectors.*

The monitor power cable is a standard three-wire cable. Make certain the monitor is OFF (side of the switch with "O" is pressed in).

1. Plug the female end into the power receptacle on the rear of the monitor.
2. Plug the male end into the AC wall receptacle.
3. Turn the monitor's power switch to the ON position.

The monitor will slowly come on. You should also notice a crackling sound of static — if the screen does not come on after powering-up the pedestal, try rotating the brightness control on the CRT.

2.4. Degaussing the Color Monitor

The color monitor is equipped with an internal degaussing coil to remedy color purity problems. Always allow the monitor to operate for at least 20 minutes before making a value judgement about picture quality or clarity.

Keep the following information in mind when using the internal degaussing procedure:

- An internal degaussing cycle occurs automatically when you power-on the color monitor.
- Always wait 8 to 10 minutes between each use of the internal degaussing mechanism.
- Press the degaussing button, and hold for 5 to 10 seconds, to manually initiate the internal degaussing procedure.

If color purity remains unacceptable after completion of this process, you may wish to perform the "External Degaussing" procedures that follow.

External Degaussing

This process is intended to supplement use of the internal degaussing coil. For customers who have an external degaussing tool and wish to use it to achieve maximum video image purity, we offer the following guidelines.

CAUTION **The degaussing coil demagnetizes EVERYTHING. Make certain that ALL TEST EQUIPMENT, MAGNETIC PERIPHERALS AND MEDIA are at least five feet from the degaussing coil before plugging it in, or else you will erase your media! Unplug coil when not in use.**

1. Plug in the monitor and allow it to warm up for 20 minutes.
2. Remove the degaussing coil from its container.
3. Before plugging it in, make doubly certain that:

   - All magnetic peripherals, media and test equipment are AT LEAST FIVE FEET away from the coil, and that
   - the coil is AT LEAST SIX FEET from the monitor.

NOTE *Remember, it is the coil itself that does the demagnetizing; the area in the center of the coil does nothing. All available sides, the top, rear and the front of the monitor need to be degaussed.*

4. Hold the coil perpendicular to the monitor, at least six feet away, and plug the coil in.
5. Press the coil switch and turn the coil parallel to the monitor screen, bringing the coil to within three inches of the screen.
6. With the coil parallel to and about three inches from the surface of the screen, slowly move the coil in six inch circular motions over the screen.

CAUTION **DO NOT RELEASE THE SWITCH OR PULL THE PLUG!**

7. Move to the sides of the monitor. Move the coil in short circular motions over each surface — sides, top and rear; Finally, degauss the monitor screen again. The whole process may take as little as 30 seconds.
8. When you have degaussed the monitor, keep the the switch pressed ON and the coil parallel to the screen. Slowly move the coil away from the monitor, moving it in 12 inch circular motions, until you are six feet away.

9. Turn the coil perpendicular to the screen and release the switch or pull the plug.
10. If the color purity problems persist, repeat the external degaussing procedures.

If neither the internal nor the external degaussing corrects the color distortion, notify your Sun service representative.

3

Accessing the Card Cage and the Backplane Jumpers

Accessing the Card Cage and the Backplane Jumpers **21**

3

Accessing the Card Cage and the Backplane Jumpers

The Sun 5-Slot Office Pedestal has a three-part card cage that provides three 9U VMEbus slots, two 6U VMEbus slots, and two expansion memory board slots.

CAUTION **Springfingers are metal strips that are installed between the edge of the PC board and the outer panel to reduce RFI emissions. Serrated metal "fingers" protrude from either side of the strip.**

If a board WITH springfingers is installed next to a board WITHOUT spring fingers, the insulator shield on the outside of the fingers MUST be present to prevent possible shorting of component leads to the spring fingers. Installation of a board WITHOUT springfingers may affect RFI emissions and may therefore affect FCC compliance. Sun will no longer be responsible for FCC compliance if non-springfingered boards are added to a system originally shipped WITH springfingers and FCC approval.

In the case of an Office Pedestal containing boards WITH and WITHOUT springfingers use the following guidelines:

- Before removing a board WITHOUT springfingers, remove the board to the left if it is equipped WITH springfingers and an outer insulator shield.
- Replace any filler panel equipped WITH springfingers by pulling out the air restrictor panel far enough to allow the springfingers to lay against the panel. Push both units into place simultaneously and fasten with the appropriate fasteners. This procedure makes replacement of the filler panels easier, and reduces the chance of damage to the springfingers.
- Always install a board WITHOUT springfingers first, and then replace the board WITH springfingers and insulator shield in the slot on the left.

If a board with springfingers is installed next to a board or filler panel also equipped with springfingers, the outside insulator shields should be removed.

Ensure that the insulator strip between the inner side of the springfingers and the PC board is intact at all times.

When removing and replacing boards with spring fingers, check the condition of the insulator strip/shield(s) and replace if damaged.

Call your SUN Customer Service Representative with any questions, or for information on how to obtain additional insulator strips or shields.

CAUTION **Some of the devices on Sun boards are very sensitive to electrostatic discharge; they can be permanently damaged. An electrostatic charge can build up in the human body and then discharge when you touch the board. *Before handling any board,* make sure that you have placed your hand on a conductive surface that is grounded to a common earth ground, (such as the metal screws on an AC receptacle cover) to discharge the static electricity present in your body.**

CAUTION **To avoid possible personal injury and damage to the system, before proceeding with any disassembly, always shut it down properly, as described in your *System Administration Manual.***

To expose the top of the 9U and 6U boards:

1. Turn the knob until it releases the top cover. When it releases, you will hear a click. (This may take several turns, as it must loosen before it will click.)
2. Pull the system top cover back and away as shown in Figure 1-2.
3. Remove the right side cover as follows:
   a) Slide the two upper clips inward to release the snaps.
   b) Swing the side cover out, then lift it away.
4. To expose the 6U boards, remove the two captive screws holding the RFI cover in place, and remove the RFI cover.

   The locations of the PC boards appear in Figure 1-2.

To remove the 6U boards, or access the backplane jumpers:

1. Complete steps 1 through 3 of the above procedure.
2. To release the card from the backplane, lift the release knobs on the edges of the board, and lift it out.
3. To expose the system backplane jumpers, remove the 6U boards.
4. To change the backplane jumper settings, see *Sun 5-Slot Office Pedestal Card Cage Slot Assignments and Backplane Configuration Procedures* (813-2068), or see *Sun Card Cage Slot Assignments and Backplane Configuration Procedures* (813-2004).

The physical layout of the jumpers appears in Figure 3-1.

To expose the tops of the memory expansion boards:

1. Complete steps 1 through 3 of the procedure for exposing the tops of the 9U and 6U boards (see above).
2. Remove the 2 captive screws holding the memory board top cover in place, and remove it.

Figure 3-1 *Backplane Jumpers*

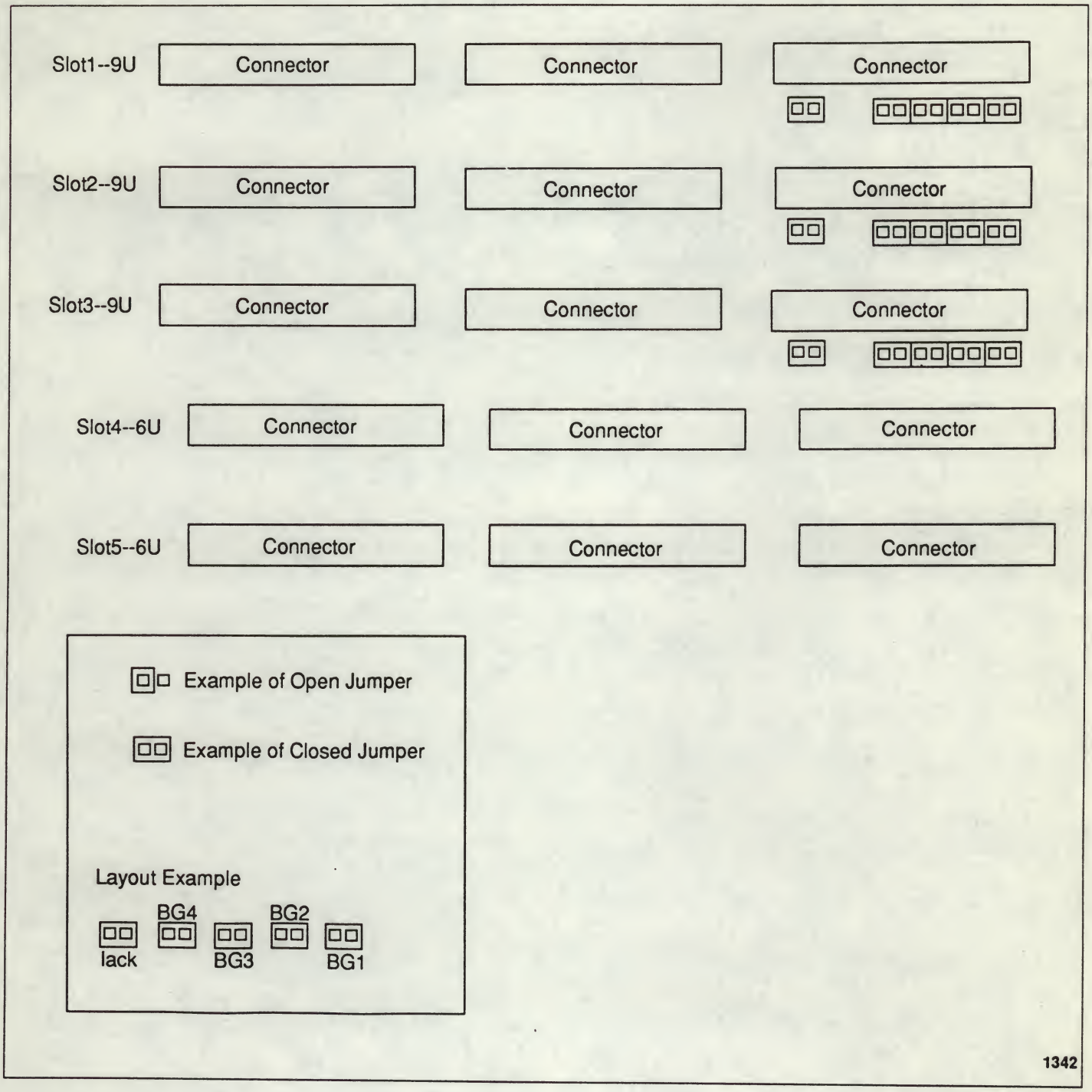

4

Preparing Ethernet

Preparing Ethernet 27

4

Preparing Ethernet

This section provides guidelines for setting up an Ethernet using Sun-supplied or third-party components. Read all manufacturer's instructions and the following directions to obtain best results. Sun does not guarantee the performance of any part not purchased from Sun.

Ethernet cables are not normally shipped with the system.

NOTE *If you have not already done so, refer to the CPU board installation document included with your system for information on properly setting the jumper that determines the Ethernet transceiver operating level. An incompatible operating level may cause Ethernet malfunction.*

1. Screw the 50 ohm coaxial cable into one of the transceiver N connectors (an N connector is a round, screw-on connector). If you are using a coaxial active (known as a "vampire") tap connector, attach it to the coax cable using the instructions included with it.

2. The coaxial cable may continue out the opposite end of the N or "vampire" connector or it may have a 50 ohm terminator attached. The cable may be terminated by attaching the 50 ohm terminator

   - to the transceiver's vacant N connector, or to
   - the end of the coaxial cable, using a 'female' double N (barrel) connector, if available.

CAUTION **The coaxial cable is fragile; handle it with care. Don't install it where it may be run over or stepped on.**

3. For each workstation, plug the female end of the workstation's transceiver cable into the 15-pin D connector on the transceiver, and the male end of the workstation's transceiver cable into the "ETHERNET" connector on the CPU board's rear edge.

4. Finally, as previously mentioned, ensure that the CPU board is configured for the proper Ethernet transceiver level (Level 1 or Level 2).

Figure 4-1 *Linking Up to a Sun Level "2" Type Ethernet Transceiver*

Key	*Description*
1	Continuing Cable or Terminator
2	Female N connector to transceiver or "vampire" tap cable channel
3	Male N connector to transceiver or "vampire" tap cable channel entrance
4	Ethernet transceiver D connector
5	Sun Workstation to Ethernet D connector

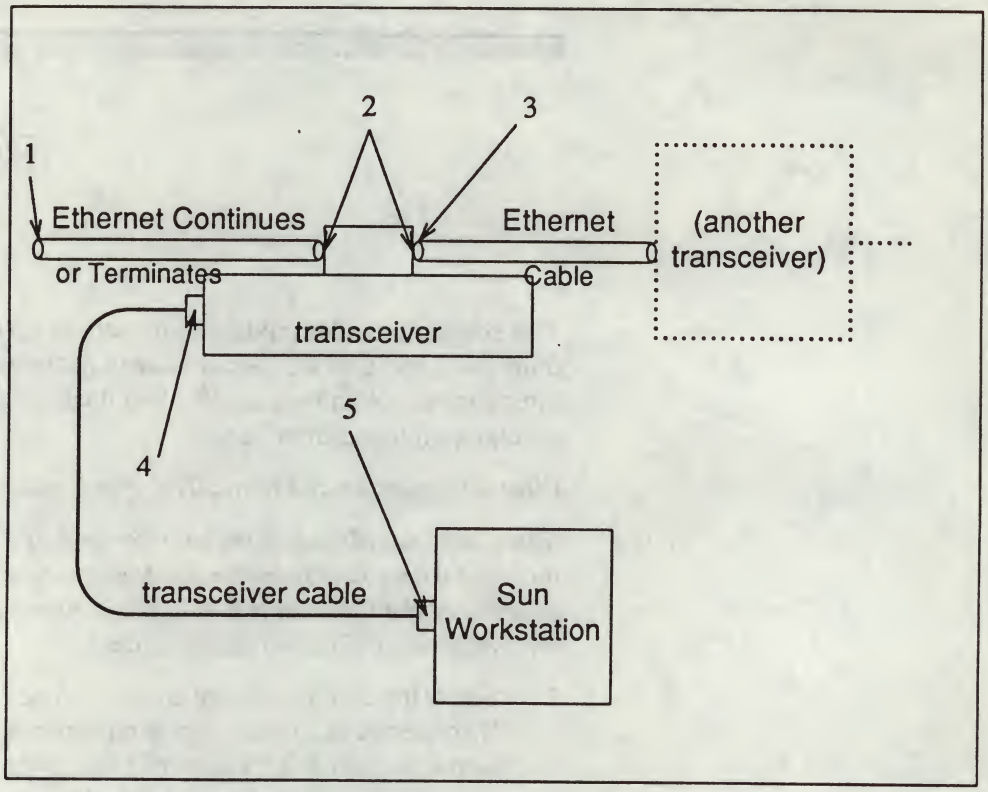

Figure 4-2 *Linking Up to a Sun Level "1" Type Ethernet Transceiver*

Key	*Description*
1	Terminator
2	Female N connector to transceiver
3	Male N connector to transceiver
4	Ethernet transceiver D connector
5	Sun Workstation to Ethernet D connector

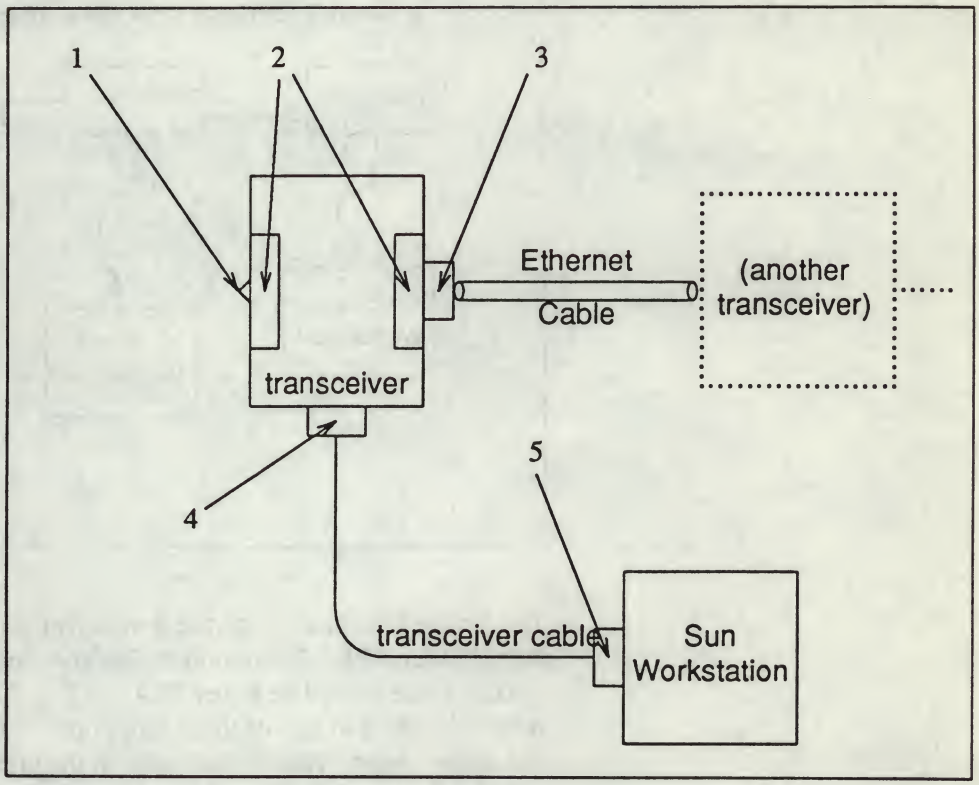

Please note that there are certain cabling limitations that must be observed for proper Ethernet implementation:

Table 4-1 *Ethernet Cabling Limitations*

MAXIMUM contiguous length of coaxial cable segments	500.0 meters
*Distance between transceivers**	2.5 meter multiples*
MINIMUM length of Ethernet coaxial cable segments	23.4 meters
MAXIMUM length of transceiver "drop" cable	50.0 meters

Transceivers must be placed at **intervals** along the Ethernet cable of 2.5 meters or some multiple of 2.5 meters. That is, you could connect transceivers 2.5 meters apart, but not 2.0 meters; you could connect transceivers 15 meters apart (6 times 2.5 meters), but not 14.0 meters (see the figure that follows).

Figure 4-3 *Ethernet Cabling Lengths*

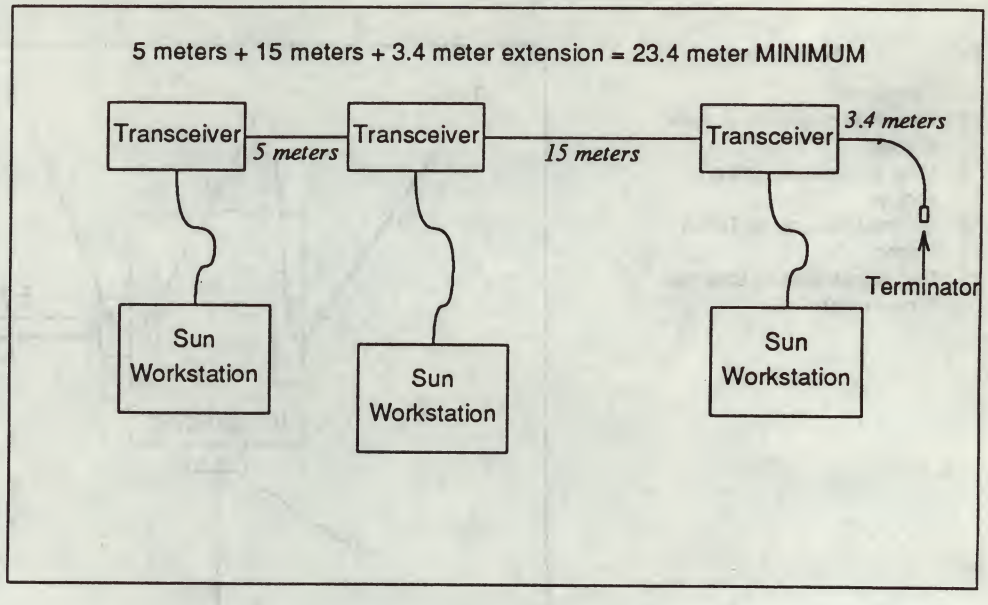

The female N connector on the transceiver connects to the male N connector on the Ethernet cable. For optimum Ethernet operation, total lengths of Ethernet coaxial cable should be either 23.4, 70.2, 117.0 or 500 meters. If your cable network falls short of one of these milestones, you may add additional coax cable and a terminator. This is illustrated in the previous figure, where we see that an additional length of coax cable and a terminator have been added to make this small Ethernet total 23.4 meters in length.

All Ethernet cable you use should be marked every 2.5 meters. Make certain you attach each transceiver on a mark.

5

Connecting External SCSI Devices

Connecting External SCSI Devices 33

5

Connecting External SCSI Devices

Before you can connect an external SCSI device to the system, you need to make the following changes to the system:

1) Remove the SCSI terminator access panel. It appears in Figure 1-2.
2) Inside, you will see the Single Inline Packets (SIPs) in sockets. Move these to the sockets labeled "Storage".
3) Replace the SCSI terminator access panel.
4) Attach the cable from the external SCSI device to the connector labelled **`SCSI to EXTERNAL`**. It uses a 50-pin mini-micro connector.

6

Specifications

Specifications **37**

6.1. Ergonomics 37

6.2. CAUTIONS 38

6

Specifications

This section provides system operating parameters and specifications.

CAUTION **A fully loaded system draws 15A; this is the maximum rated load for many power circuits. Therefore, the system needs its own branch circuit to operate safely.**

Table 6-1 *Specifications Table*

Condition	Range
Line Deviation, 115 Volt Machines	90 to 132 volts, 47 to 66 Hz
Line Deviation, 230 Volt Machines	198 to 264 volts, 47, 66 Hz
Low Voltage Spike, 115 Volt Machines	100 Volt (peak) spikes, 0.5, 60, 100, 250, 500 pps
Low Voltage Spike, 230 Volt Machines	100 Volt (peak) spikes, 0.5, 60, 100, 250, 500 pps
Operating Temperature, with disks	10 to 40° C
Operating Temperature, without disks	0 to 40° C
Non-operating Temperature, with disks	-20 to +60 ° C
Non-operating Temperature, without disks	-40 to +75° C
Operating Humidity	20% to 80% noncondensing
Non-operating Humidity	5% to 95% noncondensing
Operating Altitude	10,000 ft
Non-operating altitude	40,000 ft
Acoustic Emissions	55dbA max

6.1. Ergonomics

In order to comply with the ZHI/618 ergonomic standard, for text processing, use positive-display mode (dark characters on light background) and use an anti-glare screen.

Anti-glare screens are provided with color monitors. 19 inch monochrome monitors may be ordered with OCLI anti-glare filters.

6.2. CAUTIONS

Do not use the cable management clips on the system rear, or any of the vents on the system as handles, as this may break them.

Do not operate the system directly against a wall or other obstacle that can impede the flow of air around it.

READER COMMENT SHEET

Dear Customer,
We who work at Sun Microsystems wish to provide the best possible documentation for our products. To this end, we solicit your comments on this manual. We would appreciate your telling us about errors in the content of the manual, and about any material that you feel should be there but isn't. Comments on the Sun 5-Slot Office Pedestal Installation Manual (800-3199) are:

Typographical Errors

Please list typographical errors by page number and actual text of the error.

Technical Errors

Please list errors in technical accuracy by page number and actual text of the error.

Content

Did this guide meet your needs? If not, please indicate what you think should be added or deleted in order to do so. Please comment on any material that you feel should be present but is not. Is there material found in other manuals that would be more convenient if it were in this manual?

Layout and Style

Did you find the organization of this guide useful? If not, how would you rearrange things? Do you find the style of this manual pleasing or irritating? What would you like to see different?

Send comments to ⇒

Sun Microsystems, Inc., Attn. Technical Publications Mgr.
2550 Garcia Avenue, Mountain View, California 94043

Revision History

Dash	Revision	Date	Comments
01	**01**	October 7, 1988	Review draft
01	**05**	November 2, 1988	Beta Draft
03	**50**	February 10, 1989	Second Beta Draft
10	**A**	April 17, 1989	FCS

Sun Single-Height Parity Memory Board Installation and Configuration Manual

Sun Microsystems, Inc. • 2550 Garcia Avenue • Mountain View, CA 94043 • 415-960-1300

Part No: 813-1049-10
Revision A of 17 April 1989

VMEbus is a trademark of Motorola, Inc.

Sun Microsystems and **Sun Workstation** are registered trademarks of Sun Microsystems, Incorporated.

The Sun logo is a registered trademark of Sun Microsystems, Inc.

UNIX is a registered trademark of AT&T Bell Laboratories.

CAUTION

This equipment generates, uses, and can radiate radio frequency energy and if not installed and used in accordance with the instructions manual, may cause interference to radio communications. It has been tested and found to comply with the limits for a Class A computing device pursuant to Subpart J of Part 15 of FCC Rules, which are designed to provide reasonable protection against such interference when operated in a commercial environment. Operation of this equipment in a residential area is likely to cause interference in which case the user at his own expense is required to take whatever measures may be required to correct the interference.

This digital apparatus does not exceed the Class A limits for radio noise emissions from digital apparatus set out in the Radio Interference Regulations of the Canadian Department of Communications.

Le présent appareil numérique n'émet pas de bruits radioélectriques dépassant les limites applicables aux appareils numériques de la classe A prescrites dans le Règlement sur le brouillage radioélectrique édicté par le ministère des Communications du Canada.

Copyright © 1989 Sun Microsystems, Inc. – Printed in U.S.A.

All rights reserved. No part of this work covered by copyright hereon may be reproduced in any form or by any means – graphic, electronic, or mechanical – including photocopying, recording, taping, or storage in an information retrieval system, without the prior written permission of the copyright owner.

Restricted rights legend: use, duplication, or disclosure by the U.S. government is subject to restrictions set forth in subparagraph (c)(1)(ii) of the Rights in Technical Data and Computer Software clause at DFARS 52.227-7013 and in similar clauses in the FAR and NASA FAR Supplement.

The Sun Graphical User Interface was developed by Sun Microsystems Inc. for its users and licensees. Sun acknowledges the pioneering efforts of Xerox in researching and developing the concept of visual or graphical user interfaces for the computer industry. Sun holds a non-exclusive license from Xerox to the Xerox Graphical User Interface, which license also covers Sun's licensees.

Contents

Chapter 1 Unpacking and Inspection **1**

Chapter 2 Installation **3**

2.1. General Description 3

Safety Precautions 3

Tools Needed 3

2.2. Preliminary Installation Steps 4

After the Memory Board is Installed 6

2.3. Removing a Memory Board 6

Checking Memory Operation 7

Tables

Table 2-1 Revision History 8

Figures

Figure 2-1 Sun 5-Slot Enclosure with Front Door Open 4
Figure 2-2 Sun 5-Slot Enclosure with Covers Removed 6
Figure 2-3 Memory Board 7

1

Unpacking and Inspection

Unpacking and Inspection 1

1

Unpacking and Inspection

NOTE *This chapter applies only to boards that are shipped separately. If you are installing a new Sun Workstation (that already has a Sun CPU and Memory board in it), read the unpacking and inspection section of the installation manual that comes with the logic enclosure, then proceed to Chapter 2 for installation and configuration information if needed.*

CAUTION **These printed circuit boards contain components sensitive to damage from electrostatic discharge (ESD) that may occur, for example, when you walk across a carpet and then touch the board. Before handling the board, place your hand on a conductive surface that is grounded to a common earth ground (such as the metal screw or plate on the AC wall receptacle) to discharge any static electricity from your body.**

To minimize the risk of ESD damage, handle the board only by its edges, and store the board in the anti-static bag provided. Use appropriate grounding devices as indicated in the installation instructions.

1. Inspect the shipping container *immediately* upon receipt of your board and look for evidence of damage. If the carrier's agent is not present when the container is opened, and the contents are found to be damaged, keep all contents and packing materials for the agent's inspection.
2. If there is no evidence of damage, carefully remove the board from the shipping container. Save the carton and the packing material for possible later use.
3. Inspect the board for any socketed parts that may have loosened during shipment. Firmly reseat any loose components or SIMMs in their sockets.

CAUTION **Use care when handling devices from the board, they are fragile and can damage easily. When reseating chips, make sure that the pins are aligned with the holes in the socket, then gently push down on the center of the chip. In addition, make sure that the dot or "v-shaped" notch on the chip is aligned toward the board's "P" connector.**

2

Installation

Installation 3

2.1. General Description 3

Safety Precautions 3

Tools Needed 3

2.2. Preliminary Installation Steps 4

After the Memory Board is Installed 6

2.3. Removing a Memory Board 6

Checking Memory Operation 7

2

Installation

2.1. General Description

The Sun Single-Height Parity Memory Board is designed to operate only with specific Sun systems. This parity error checking board communicates with the CPU through signals from the Sun "P2" and "P3" Slot 1 backplane connectors. Measuring 5.75 inches wide and 11.5 inches long (14.6cm x 29.2cm), the memory board is approximately one third the size of the Sun standard VME triple-height boards. Each board uses Single Inline Memory Modules (SIMMs) for memory storage. The SIMMs are arranged in four separate "banks". Each "bank" contains four SIMMs with a memory capacity of 1 Megabyte per SIMM. The board is completely ready for installation into your system and no adjustments are necessary to either the CPU or memory board.

The single-height memory board can be installed as the only memory board in the Sun system, or a maximum of two can be installed in a system. Each board has all SIMM banks stuffed with memory (16 SIMMs).

The power requirements for **each** 16 Mbyte memory board you add to your system are:

Active: 2.0 Amps @ +5 VDC, 10.0 watts

Safety Precautions

Turn off power switch before servicing.

To reduce the risk of electric shock and or fire hazard, refer all servicing to qualified service personnel.

Tools Needed

To complete any or all of the procedures in this document, you need the following:

- A medium sized flat-blade screwdriver - for removing cover panel connectors
- A small flat-blade screwdriver - used when extracting memory boards

Figure 2-1 *Sun 5-Slot Enclosure with Front Door Open*

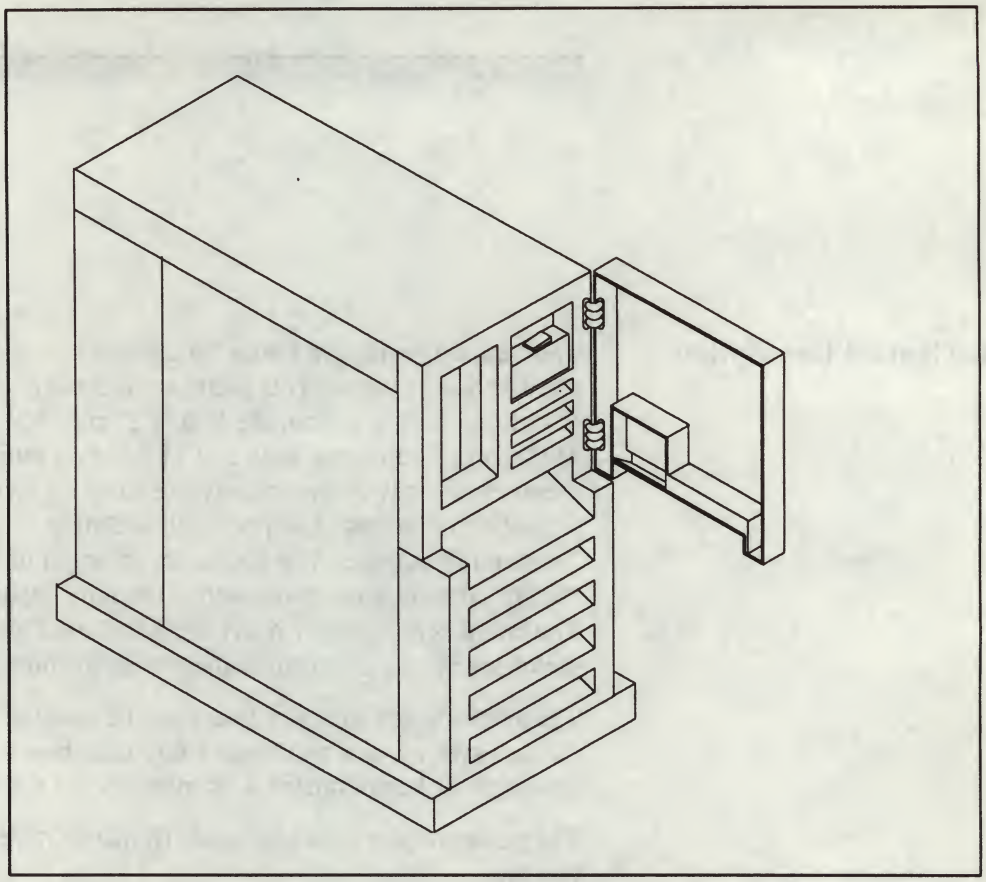

2.2. Preliminary Installation Steps

1. Login as root (/) or superuser (su), then halt the operating system by entering:

```
#sync
Return
#sync
Return
/etc/halt
Return
```

or

```
/etc/fasthalt
```

from the console keyboard.

CAUTION **You MUST halt the operating system before turning off the system power or damage to files may result.**

2. When the system has been halted, turn off the system power by opening the swing-out front panel and pressing in the O side of the on/off rocker switch. At this point, all system fans should cease operating and when you have opened the top cover, all LED (Light Emitting Diode) indicators on the rear panel of any boards should be dark. Leave the system plugged in.

3. Access the card cage using the instructions below and the illustration on the following page:

   a. Locate the top cover captive fastener located at the rear of the system (the end opposite the on/off switch). Turn this captive fastener counter-clockwise to release the latch — then turn it three or four more turns until it is completely open. You can observe the way the locking mechanism works by looking inside the cover area. Slide the cover back 3 inches (7.6 cm); then lift the top cover up and away from the unit.

   b. Starting from the front of the system, (the end with the on/off switch) look at the right side of the unit. Just below the lip of the triple-height enclosure are two slide-lock fasteners.

   c. Push the slide-lock fasteners to the unlocked position and tilt the sheetmetal panel outward. Lift it up and away from the unit.

   d. Locate the sheet-metal cover for the single-height boards — it is near the front of the unit. Use a flat-blade screwdriver to undo the two captured screws and pull the memory board top cover out.

4. Wrap the anti-static wrist strap around your arm and attach the other end to a bare-metal portion of the enclosure. Remove the memory board from its anti-static bag only if you are ready to install it.

Figure 2-2 *Sun 5-Slot Enclosure with Covers Removed*

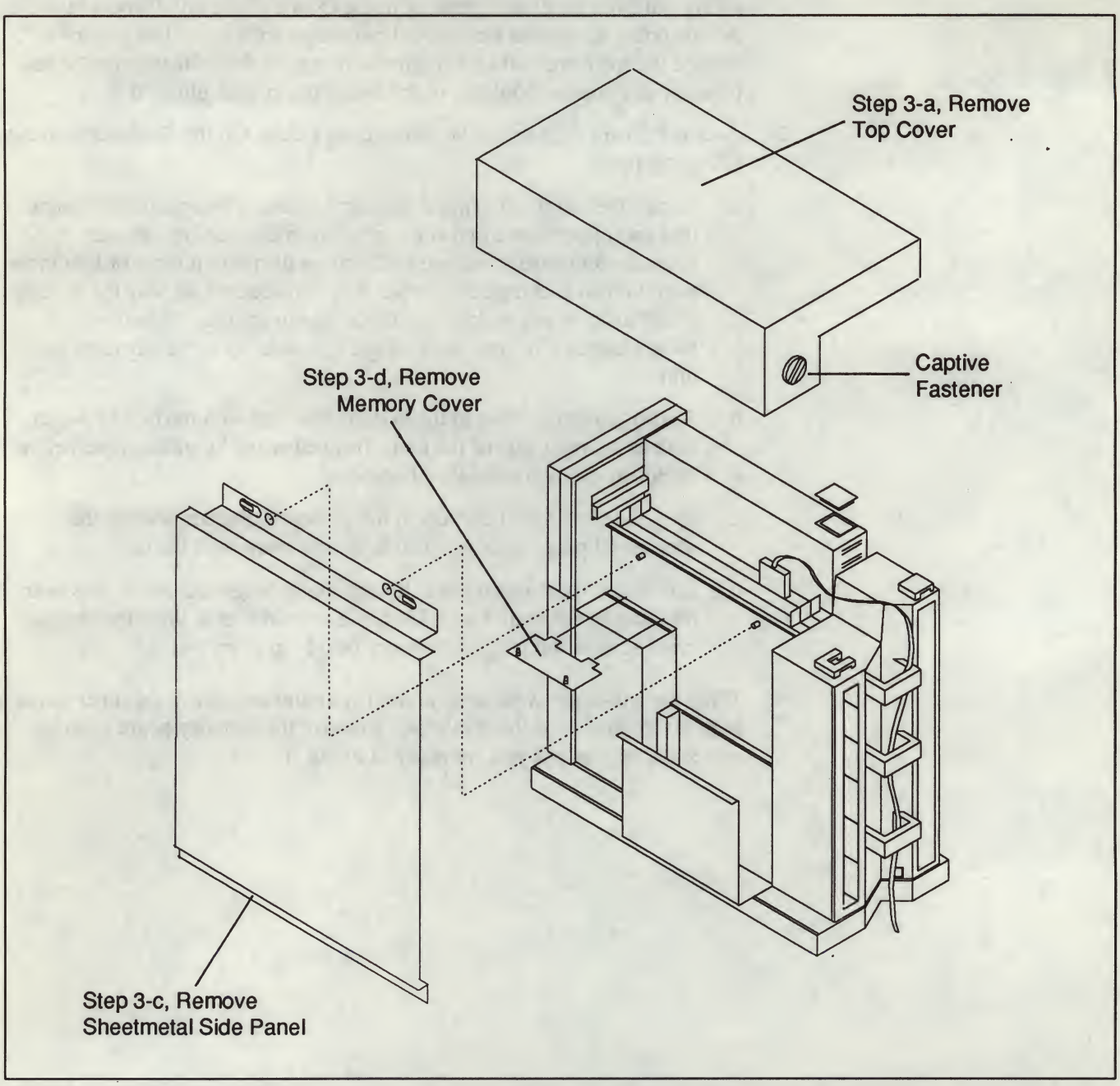

5. Holding the memory board by its edges, carefully place it in the slides (with the "P" connector down and the chips facing outward). Slide it down into either slot of the enclosure and firmly seat the connector using both hands if necessary.

CAUTION **DO NOT FORCE the board into a slot — you may damage it. It should insert and seat smoothly. If it binds, remove it, and inspect the cardcage slot for any obvious obstructions. Also inspect both the board and the backplane for damage. Correct the problems before attempting to reinsert the board.**

6. Remove the wrist strap and store for possible later use. After the installation is complete, re-install all sheetmetal covers and secure all screws and fasteners by reversing the previous sub-steps. Turn the top cover captive fastener clockwise to secure the latch in the bracket hook. Continue to turn the captive fastener three or four more turns until the lock mechanism is completely in place.

After the Memory Board is Installed

Once board installation is complete and the system is powered up, the hardware automatically assigns memory locations.

Turn on the system power and allow the system to boot completely. When the boot process has been successfully completed, the console display should show the login prompt.

Refer to the Sun PROM manual to modify the EEPROM so that all memory is tested in the boot diagnostic.

NOTE *The system may take slightly longer to boot because of the additional memory.*

2.3. Removing a Memory Board

Use this subsection if you need to extract a memory board to move a board from its slot for any purpose. Read the ESD warning on page three if you have not already done so.

1. If you have not yet accessed the single-height enclosure, refer to the subsection on *Preliminary Installation Steps* and use steps one through four to do so.
2. Face the side of the enclosure and place the tip of a small flat-blade screwdriver under the inner lip of the board's extraction lever.
3. Gently pry the board lever up, it should pop up about ½ inch.
4. Lift up on the extraction lever and slide the board up and out of the single-height enclosure. Place it on the anti-static mat while completing any other procedures. Place it inside an anti-static bag for shipment or future use in other systems.

Figure 2-3 *Memory Board*

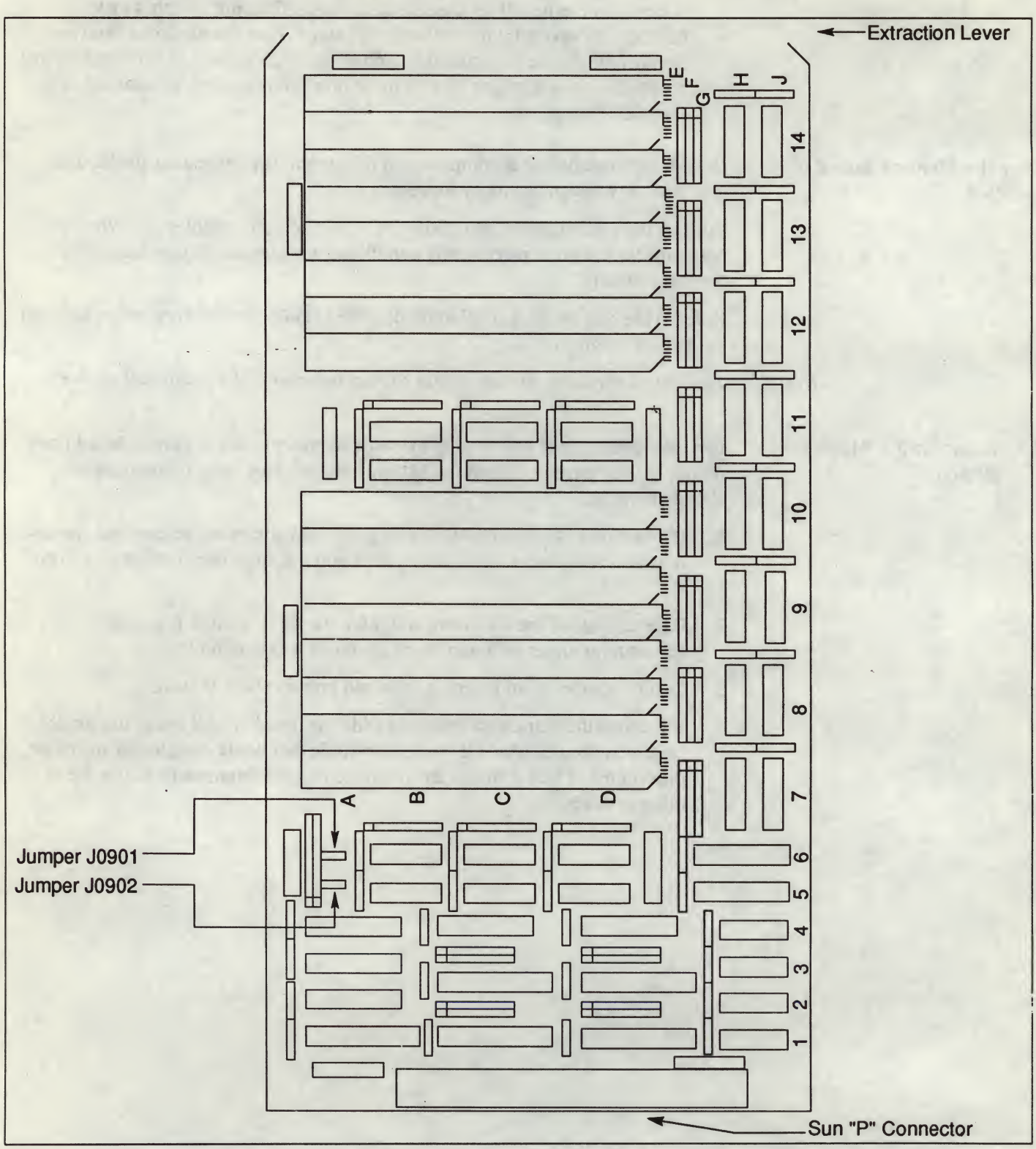

Checking Memory Operation

During the boot (power-up) process the user can check to see if the correct size of memory is displayed.

Table 2-1 *Revision History*

Revision	Date	Comments
01-01	15 October 1988	Alpha Draft of this manual
50-02	7 November 1988	Beta Draft of this manual
A-10	17 April 1989	Release of this manual

READER COMMENT SHEET

Dear Customer,
We who work at Sun Microsystems wish to provide the best possible documentation for our products. To this end, we solicit your comments on this manual. We would appreciate your telling us about errors in the content of the manual, and about any material that you feel should be there but isn't. Comments on the Sun single-Height Parity Memory Board Installation and Configuration Manual, Part No. (813-1049-xx) are:

Typographical Errors

Please list typographical errors by page number and actual text of the error.

Technical Errors

Please list errors in technical accuracy by page number and actual text of theerror.

Content

Did this guide meet your needs? If not, please indicate what you think should be added or deleted in order to do so. Please comment on any material that you feel should be present but is not. Is there material found in other manuals that would be more convenient if it were in this manual?

Layout and Style

Did you find the organization of this guide useful? If not, how would you rearrange things? Do you find the style of this manual pleasing or irritating? What would you like to see different?

Send comments to ⇒

Sun Microsystems, Inc., Attn. Technical Publications Mgr.
2550 Garcia Avenue, Mountain View, California 94043